ARTESYN DS2500PE

180 Vac to 264 Vac 2500 W

XXXX

DATA SHEET

Distributed Power Bulk Front-end

Single Ouptut Standard

Total Output Power:

2500 W continuous

SPECIAL FEATURES

- 2500 W output power
- High-power and narrow form factor
- 1U form factor
- High-density design: 23.3 W/in^3
- Active Power Factor Correction
- EN61000-3-2 harmonic compliance
- Inrush current control
- 80plus platinum efficiency
- N+1 or N+N redundant
- Hot-pluggable
- Active current sharing
- PMBus compliant
- Compatible with Artesyn's universal PMBus GUI
- Two-year warranty

COMPLIANCE

- Class A +6 dB margin Conducted/ Radiated EMI
- EN61000-4-11

SAFETY

- UL/cUL 60950 (UL Recognized)
- DEMKO+ CB Report EN60950
- EN60950
- CE Mark
- BSMI

©2020 Advanced Energy Industries, Inc.

ELECTRICAL SPECIFICATIONS

Input			
Input voltage range	180 to 264 Vac		
Frequency	47 Hz to 63 Hz		
Efficiency	94.0% peak		
Max input current	15.6 Arms		
Inrush current	55 Apk		
Conducted EMI	Class A		
Radiated EMI	Class A		
Power factor	>0.97, typical		
ITHD	10%		
Leakage current	0.75 mA		
Hold-up time	11ms		
Output			
Main DC Output	MIN	NOM	MAX
Nominal setting	-0.20%	12	0.20%
Total output regulation range	11.4 V		12.6 V
Dynamic load regulation range	11.4 V		12.6 V
Output ripple			120 mVp-p
Output current	2 A[5]		208 A
Current sharing	Within +/-5% of full load rating		
Capacitive loading	1,000 µF		25,000 µF
Start-up from AC to output			3000 ms
Output rise time	5 ms		50 ms
Standby DC Output			
Nominal setting	-1%	3.3 V	1%
Total output regulation range	3.135 V		3.465 V
Dynamic load regulation range[1]	3.135 V		3.465 V
Output ripple			50 mVp-p
Output current	0.5 A		2.7 A
Current sharing		N/A	
Capacitive loading	47 µF		560 µF
Start-up from AC to output			2500 ms
Output rise time	2 ms		50 ms
Protections			
Main Output	MIN	NOM	MAX
Over-current protection[2]	120%		150%
Over-voltage protection[3]	13.5 V		15.0 V
Under-voltage Protection[3]	9.6 V		11.0 V
Over-temperature protection		Yes	
Fan fault protection		Yes	
Standby Output			
Over-current Protection[4]	120%		150%
Over-voltage Protection[3]	13.5 V		15.0 V
Under-voltage Protection	9.6 V		11.0 V

1 Dyanmic load limits will apply for 100 A step load at 0.5 A/us
2 Autorecovery if the overcurrent is less than 140% and last only for <1000 ms. Otherwise, immediate latch if the current is more than 140%
3 Latch mode
4 Autorecovery
5 Minimum starting current during transient load. Output stays within regulation range at zero load.

CONTROL AND STATUS SIGNALS

Input Signals			
PSON			
Active LOW signal which enables/disables the main output. Pulling this signal LOW will turn-on the main output.			
		MIN	MAX
V_{IL}	Input logic level LOW		0.8 V
V_{IH}	Input logic level HIGH	2.0 V	3.3 V
I_{SOURCE}	Current that may be sourced by this pin		2 mA
I_{SINK}	Current that may be sunk by this pin at low state		0.5 mA
PSKIL			
First break/last mate active LOW signal which enables/disables the main output. This signal will have to be pulled to ground at the system side with a 220 ohm resistor. A 100 pF decoupling capacitor is also recommended.			
		MIN	MAX
V_{IL}	Input logic level LOW		0.8 V
V_{IH}	Input logic level HIGH	2.0 V	3.3 V
I_{SOURCE}	Current that may be sourced by this pin		2 mA
I_{SINK}	Current that may be sunk by this pin at low state		0.5 mA
FAN_POWER			
Supplies the fan voltage to the power supply. These pins should be tied to the main 12 V output at the system side.			
		MIN	MAX
I_{SOURCE}	Current that may be sourced by this pin		0.8 V
A0, A1			
Addressing pins of the power supply for I^2C communications. Refer to the addressing tables below.			
		MIN	MAX
	Internal pull-ups to 3.3V.It is recommended for the system to have pull-ups and decoupling on the address lines for better noise immunity.	R = 22 k ohm	C = 47 pF
V_{IL}	Input logic level LOW		0.8 V
V_{IH}	Input logic level HIGH	2.0 V	3.3 V
I_{SOURCE}	Current that may be sourced by this pin		4 mA
I_{SINK}	Current that may be sunk by this pin	4 mA	
Output Signals			
ACOK			
Signal used to indicate the presence of AC input to the power supply. A logic level HIGH will indicate that the AC input to the power supply is within the operating range while a logic level LOW will indicate that AC has been lost.			
		MIN	MAX
V_{IL}	Output logic level LOW		0.6 V
V_{IH}	Output logic level HIGH	2.0 V	3.3 V
I_{SOURCE}	Current that may be sourced by this pin		3.3 mA
I_{SINK}	Current that may be sunk by this pin at low state		0.7 mA
PWR_GOOD / PWOK			
Signal used to indicate that main output voltage is within regulation range. The PWR_GOOD signal will be driven HIGH when the output voltage is valid and will be driven LOW when the output falls below the under-voltage threshold. This signal also gives an advance warning when there is an impending power loss due to loss of AC input or system shutdown request. More details in the Timing Section.			
		MIN	MAX
V_{IL}	Output logic level LOW		0.8 V
V_{IH}	Output logic level HIGH	2.0 V	3.3 V
I_{SOURCE}	Current that may be sourced by this pin		3.3 mA
I_{SINK}	Current that may be sunk by this pin at low state		0.7 mA

CONTROL AND STATUS SIGNALS (CONTINUED)

Output Signals			
PS_PRESENT			
Signal used to indicate to the system that a power supply is inserted in the power bay.			
PS_INTERRUPT			
Active low signal used by the power supply to indicate to the system that a change in power supply status has occurred. This event can be triggered by faults such as OVP, OCP, OTP, and fan fault. This signal can be cleared by a CLEAR_FAULT command. A 100 pF decoupling capacitor is recommended.			
		MIN	MAX
V_{IL}	Output logic level LOW		0.8 V
V_{IH}	Output logic level HIGH	2.0 V	3.3 V
I_{SOURCE}	Current that may be sourced by this pin		4 mA
I_{SINK}	Current that may be sunk by this pin at low state		4 mA
BUS Signals			
ISHARE			
Bus signal used by the power supply for active current sharing. All power supplies configured in the system for n+n sharing will refer to this bus voltage inorder to load share.			
Voltage Range	The range of this signal for active sharing will be up to 8.0 V, which corresponds to the maximum output current.		
		MIN	MAX
I_{SHARE} Voltage	Input logic level LOW	7.75	8.25
	Voltage at 50% load, stand-alone unit	3.85	4.15
	Voltage at 0% load, stand-alone unit	0	0.3
I_{SOURCE}	Current that may be sourced by this pin		160 mA
SCL, SDA			
Clock, data and addressing signals defined as per I²C requirements. The maximum system side resistor pull-up and decoupling capacitance			
		MIN	MAX
V_L	Logic level LOW		0.8 V
V_H	Logic level HIGH	2.0 V	3.3 V

Note: All signal noise levels are below 400 mVpk-pk from 0 - 100 MHz.

I²C Addressing Table		
A1	A0	Active Bus
LOW	LOW	None
LOW	HIGH	All “A”
HIGH	LOW	All “B”
HIGH	HIGH	None

FRU EEPROM Address	
Write	0 x A0h
Read	0 x A1h

I²C Address	
Write	0 x A0h
Read	0 x A1h

ELECTRICAL SPECIFICATIONS

LED Indicators			
	AC GOOD LED	DC GOOD LED	FAULT LED
Color	GREEN	GREEN	AMBER
No AC input to PSU	Off	Off	Off
AC present, STBY ON, main output OFF	On	Off	Off
Main output ON	On	On	Off
Power supply failure (OVP, OTP, FAN FAULT)	On	Off	Blinking

Firmware Reporting And Monitoring			
	Accuracy Range		
Output loading	5 to 20%	20 to 50%	50 to 100%
Input voltage	±5%		
Input current	±0.55 A fixed error	±4%	
Input power	±10 W at <250 W input	±5%	
Output voltage	±2%		
Output current	2.5 A fixed error	±2%	
E_{IN}	±15% from 10% to 20% load	±5%	
Fan speed	±250 RPM		

PMBus	YES
Remote ON/OFF	YES

Timing Specifications				
	Description	Min	Max	Unit
T_{sb_On}	Delay from AC being applied to standby output being within regulation		2500	ms
T_{sb_Vout}	Delay from standby output to main output voltage being within regulation		2000	ms
T_{sb_ACOK}	Delay from ACOK being asserted to standby output being within regulation		1500	ms
$T_{AC_On_Delay}$	Delay from AC being applied to main output being within regulation		3000	ms
T_{PWOK_On}	Delay from output voltages within regulation limits to PWOK asserted	900	1100	ms
T_{ACOK_Delay}	Delay from loss of AC to assertion of ACOK		10	ms
$T_{PWOK_Hold\text{-}up}$	Delay from loss of AC to deassertion of PWOK	10		ms
$T_{Vout_Hold\text{-}up}$	Delay from loss of AC to main output being within regulation	12		ms
$T_{sb_Hold\text{-}up}$	Delay from loss of AC to standby output being within regulation	50		ms
$T_{PS_ON_Delay}$	Delay from ON command to output being within regulation		500	ms
T_{PWOK_Off} & $T_{PS_OFF_Delay}$	Delay from OFF command to output falling out of regulation and PWOK going low		0.3	ms

TIMING DIAGRAM

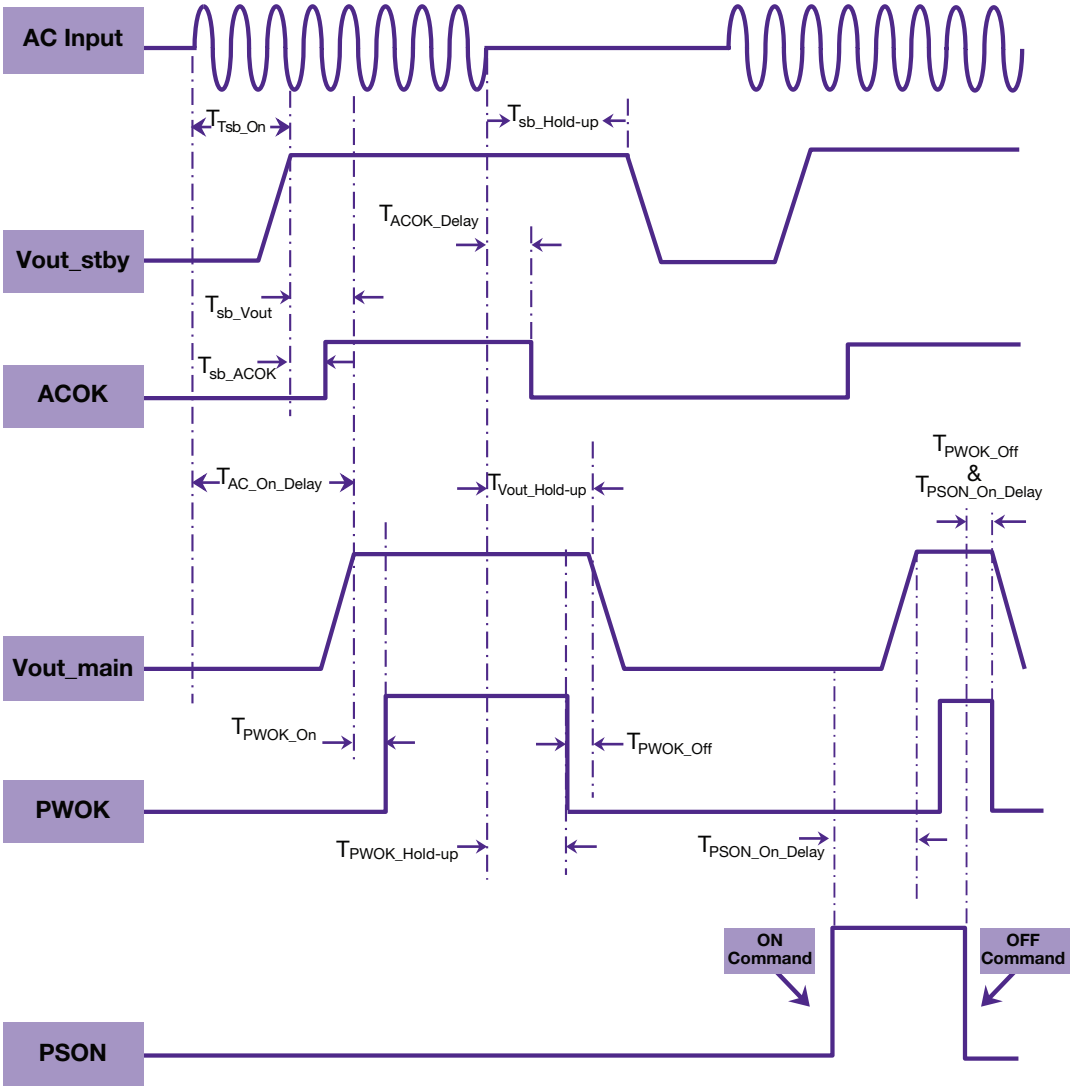

ENVIRONMENTAL SPECIFICATIONS

Operating temperature	10 to 50 °C
Operating altitude	up to 10,000 feet
Operating relative humidity	8% to 85% non-condensing
Non-operating temperature	-40 to +60 °C
Non-operating relative humidity	5% to 95% non-condensing
Non-operating altitude	up to 50,000 feet
Vibration and shock	Standard operating/non-operating shock/vibration
ROHS compliance	Yes
MTBF	400,000 hours per Telcordia SR332
Operating life	Minimum of 5 years
Reliability	All electronic component derating analysis and capacitor life calculation is done at maximum ambient, 80% of maximum rated load, nominal input line voltage.

MECHANICAL OUTLINE

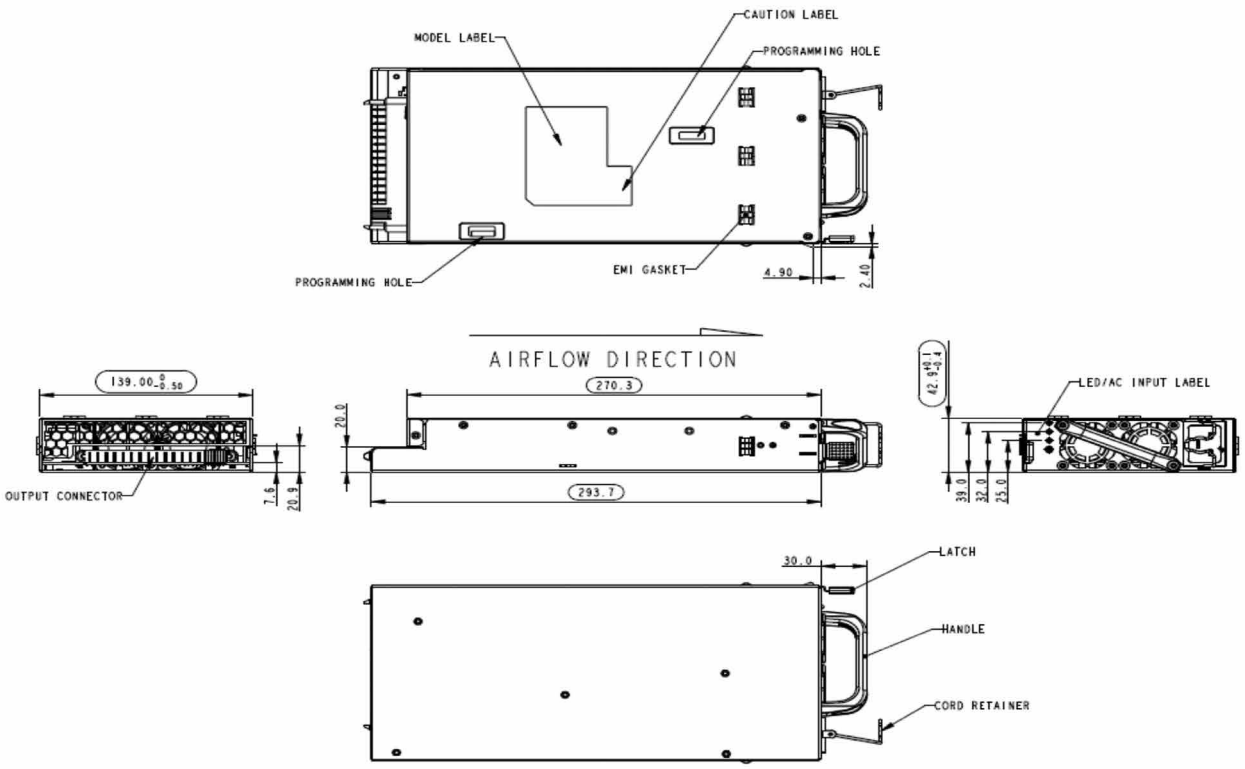

CONNECTOR DEFINITIONS

Output Connector Part Number	Molex Ten60 Power 46437-1123
Mating Connector Part Number	Molex ten60 Power 46562-1123 or any Molex recommended equivalent

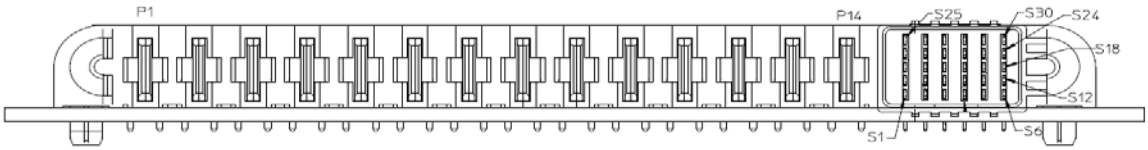

Output Connector Pin Configuration			
S1	FAN INPUT	S16	RTN
S2	FAN INPUT	S17	PSKILL
S3	FAN INPUT	S18	3V3STBY
S4	PRESENT_A	S19	PRESENT_B
S5	RESERVED	S20	RTN
S6	SCL_A	S21	RESERVED
S7	PWR_GOOD_A	S22	ISHARE
S8	ACOK_A	S23	RTN
S9	A0	S24	SCL_B
S10	PS_INTERRUPT_A	S25	PWR_GOOD_B
S11	COMM_BUS_RESET_A	S26	ACOK_B
S12	SDA_A	S27	A1
S13	RESERVED	S28	PS_INTERRUPT_B
S14	VSENSE-	S29	COMM_BUS_RESET
S15	VSENSE+	S30	SDA_B
P1-P4	12 VOUT	P5-P14	RTN

ABOUT ADVANCED ENERGY

Advanced Energy (AE) has devoted more than three decades to perfecting power for its global customers. AE designs and manufactures highly engineered, precision power conversion, measurement and control solutions for mission-critical applications and processes.

Our products enable customer innovation in complex applications for a wide range of industries including semiconductor equipment, industrial, manufacturing, telecommunications, data center computing, and medical. With deep applications know-how and responsive service and support across the globe, we build collaborative partnerships to meet rapid technological developments, propel growth for our customers, and innovate the future of power.

PRECISION | POWER | PERFORMANCE

For international contact information,
visit advancedenergy.com.

powersales@aei.com (Sales Support)
productsupport.ep@aei.com (Technical Support)
+1 888 412 7832

Specifications are subject to change without notice. Not responsible for errors or omissions. ©2020 Advanced Energy Industries, Inc. All rights reserved. Advanced Energy®, AE® and Artesyn™ are U.S. trademarks of Advanced Energy Industries, Inc.

ENG-DS2500PE-235-01 12.22